UCL

De Morgan Association Newsletter

2020/21

Contents

Issue 28
August 2021

Editor: Professor Ted Johnson
Associate Editor: Adrianna Mickiewicz

editor_newsletter@math.ucl.ac.uk

@MathematicsUCL

Letter from the Editor

Professor Ted Johnson

This last year has been very different from any previous year. All our usual events went online. The De Morgan "dinner" became an online lunchtime event on 5th June 2020 with a fascinating talk from Dr Emily Shuckburgh, OBE, climate scientist, mathematician and science communicator, Director of Cambridge Zero, the University of Cambridge's climate change initiative, and fellow of Darwin College, Cambridge. Dr Shuckburgh discussed the Mathematics of Climate, related closely to the theoretical results discussed in our courses on Geophysical Fluid Dynamics. This year's Departmental Teaching Award was presented to Dr Nadia Siderova. Although we did not have the pleasure of eating and drinking together the online format did mean that we could talk with alumni from further afield, who would not normally have been able to attend the dinner.

The joint Mathematics and Statistics Graduation Ceremony was held online on 5th October 2020 and followed the usual pattern but with both Heads of Department, Professor Helen Wilson and Professor Richard Chandler, giving addresses.

The Christmas party was online as well, organised by the Deputy Departmental Manager, Soheni Francis, using the Toucan platform. It was open to staff and postgraduate students, and 59 people attended. We could form tables and drift around chatting. Professor Helen Wilson gave a brief speech and then judged the Christmas jumper competition before a trivia quiz, won resoundingly by the Professional Services team.

Our main article this year is about the CHIMERA project (Collaborative Healthcare Innovation through Mathematics, Engineering and Artificial Intelligence). This is an exciting development for Mathematics and UCL, forming one of only four Mathematical Sciences in Healthcare Hubs in UK.

We encourage you to send us articles, news and photographs. Despite the disruption we have many new staff who will introduce themselves and their work in future issues.

Letter form the Head of Departament

Professor Helen Wilson

The academic year 2020/21 has been unlike any the department has ever seen. It's quite hard to know where to begin! We began the academic year with a slow emergence from the UK's first coronavirus lockdown. Our buildings had been closed since March, and we had to design a socially-distanced way of working before we could re-open. All staff and PhD students were allocated to cohorts, and could only come into the office on their designated days; we had hand-gel dispensers on all the entrances, a facemask rule in the corridors, and all the teaching rooms marked out with 2m-distant seating.

Social distancing made a huge reduction in the capacity of our teaching spaces. UCL made the decision early on to permit students to study remotely if they wanted, and we had to restructure all our teaching so that the majority was online, but some – in groups no larger than 15 – could take place face-to-face. All the lecture content had to be delivered online, and the majority of us did this by pre-recorded videos. That was a steep learning curve, and we quickly discovered that giving a video lecture takes a lot longer than delivering the same content in the lecture theatre – even though the resulting videos are shorter than the lecture hours we would have used in a normal year. In the higher years the choice of delivery method was largely left up to the lecturer, but we ran very careful coordination across the compulsory modules in the first two years. All our online teaching was in the mornings, to accommodate the large number of students who were studying remotely in China; they had office hours on Mondays, and then tutorials for one of their four modules on each of the remaining days. Each week they had two written courseworks and two online quizzes; and in the first year they worked in small groups to prepare presentations to give in their tutorials. Some of the tutorials were given face-to-face, at least until the second lockdown in November.

These plans were all coming along nicely; and then we came to the A-level results crunch. By the time the results were finalised (after "The Algorithm" and then the return to Teacher Assessed Grades) no fewer than 440 students had got the grades and were signed up to study first year

Mathematics at UCL. We'd been expecting about half that…

I will always be grateful for the way the department pulled together in Autumn 2020. We all gave more tutorials than we really had time for – and it was done with a good grace and an "all hands to the pump" attitude. The crisis brought out the best in everyone. Fortunately, we were able to hire extra people to help manage the load, so since just before Christmas we welcomed 9 new Associate Lecturers on the Teaching pathway – Betti Hartmann, Jonathan Marshall, Niki Kalaydzhieva, Michal Kwasigroch, Beatriz Navarro Lameda, Yusra Naqvi, David Solomon, Ben Davis and Ruth Reynolds. They worked flat out in their first term with us, giving tutorials, marking first year exams, and taking on some of the pastoral support for our huge student body. Next year they will finally get to teach some whole modules!

These weren't the only appointments this year. We welcomed three new additions to the Professional Services Team – Abdal Asif and Adam Slater, who are both Teaching & Learning Administrators and Julie Taylor who is a CORU Senior Research Administrator. For 2021/22 we have 5 new academic staff starting: Mohit Dalwadi, Philip Pearce, Neofytos Rodosthenous and Alex Tse in Mathematics, and Luca Grieco in CORU.

The department had two major projects to complete this year. The first was renewal of our Athena SWAN Silver award, which we applied for last November, and I'm delighted to report was awarded this April in recognition of our actions to improve diversity, especially around gender. Many thanks to those who contributed, especially to the final writing push! The second was the Research Excellence Framework or REF, which the whole academic sector goes through every 7 years. We won't hear the results of that for a while, but it was a huge joint effort and, again, thanks are due to a wide range of colleagues for the efforts they put into our submission.

Of course, in January we went back into lockdown. All teaching was remote for the rest of the academic year, but at least we were prepared this time (unlike the previous March): we moved seamlessly into fully-online delivery and, though our students clearly haven't had the full student experience you'd dream of, I really think the education we've been able to deliver has been up to standard – and in some areas maybe even better than before.

Throughout the progress of the pandemic, Professor Christina Pagel (Director of CORU) has been a trusted and cogent media presence. Her briefings with Independent SAGE have brought clarity and a dose of reality to the coverage of the pandemic: we're proud she's part of the department!

I'm writing this in April, as we begin to emerge from the third lockdown. We're making plans to safely re-open our buildings, as we did last summer; hopefully this time they will stay open.

Looking back on the most recent lockdown, cold and grey as it was, I found solace and relaxation in binge-watching old series of Bake-Off. And I'm left wondering how many more theorems we could create if we only had our own departmental Proving Drawer.

The De Morgan Dinner

The De Morgan Dinner has long been our flagship alumni event – a chance for alumni old and new to see one another, meet some of the staff they remember, and celebrate with the year's graduating students.

In 2020, for the first time ever, we had to cancel the dinner. Instead, we put on an online celebration for graduating students and alumni, on 5 June 2020. We ran it at lunchtime because so many of the graduating students were in China, having returned home at the beginning of the pandemic. We couldn't stretch to dinner, but we did our best to create an enjoyable event.

Usually the dinner is held just before the final year students get their results. This time we took advantage of the slightly later timing to present some of our final year students with the prizes they were being awarded on the strength of those results. A few members of staff gave short reflections on the year, and lots of people took the opportunity to congratulate our graduates.

As usual at the De Morgan Dinner, we also presented the Departmental Teaching Award, a rather snazzy little blackboard, awarded on the simple criterion of (to quote my predecessor) "bloody good teaching". This year's recipient was Nadia Sidorova, not just for her excellent teaching of such modules as Analysis 4 and Probability over many years, but also for masterminding the move to a really coherent online provision during 2020/21 – especially for the first year students who had no experience of what university life usually feels like.

Our "after dinner speaker" was Dr Emily Shuckburgh OBE, director of Cambridge Zero. She gave a fascinating overview of the use of Mathematics to combat climate change, with the key message for our graduating students that it's not the mathematics you've learnt, but the mindset, that will take you places in the future.

We ended with a series of breakout rooms (our best attempt to stimulate the sort of chat that would have happened around the tables at the real dinner).

Attendance was excellent, and in particular some overseas alumni who we hadn't seen for years – people who wouldn't make an international trip just for a dinner - were able to join us. Of all the things we've had to move online this year, this one event stands out as a real success, and we plan to keep it in our departmental calendar even when the dinner itself is able to move back to its original format.

CHIMERA: A Mathematical Sciences in Healthcare Research Hub at UCL

In March 2020, the Engineering and Physical Sciences Research Council (EPSRC) announced four Mathematical Sciences in Healthcare Hubs across the UK, one of which is now based at UCL. CHIMERA, which stands for Collaborative Healthcare Innovation through Mathematics, Engineering and Artificial Intelligence, provides an extraordinary opportunity for mathematicians to support clinical decision making by developing new data-driven mathematical models of human physiology. The hub involves three academics from UCL Mathematics and the Clinical Operational Research Unit: Professor Christina Pagel, who co-leads the hub, Professor Nicholas Ovenden, who co-leads the work package on mathematical modelling, and Dr. Alejandro Diaz De La O, who leads the work package on computational statistics. Academics from other departments across UCL form the remainder of the core group. Professor Rebecca Shipley and Professor Vanessa Diaz (UCL Mechanical Engineering) co-lead the hub and the mathematical modelling work package, respectively; the third work package on machine learning is led by Professor Simon Arridge (UCL Computer Science).

The team is complemented by world-renowned clinical experts from University College London Hospital (UCLH) and from Great Ormond Street Hospital (GOSH) and we have access to unique, high volume and rich vital signs data sets from both adult and paediatric intensive care units via these partnerships. CHIMERA will act as a hub for a network of national and international collaborators spanning mathematical and engineering sciences, as well as critical care and industrial partners. The hub will run for at least four years and involves PhD students and post-doctoral researchers working with academics and clinicians to learn and develop the appropriate physiological models to support clinical decision-making.

With this wealth of expertise, CHIMERA brings together state-of-the-art statistical methods, biomechanical models and machine learning techniques in order to learn the underpinning relationships between the internal physiology of a critically-ill patient and the patient's outward vital signs. For critically-ill patients in intensive care, typical vital signs, such as blood pressure, heart rate, respiratory rate, blood oxygen saturation and temperature, are recorded at regular time intervals. Given these data, the overarching questions the hub aims to answer include the following: Is it possible to develop mathematical models to predict accurately and reliably from the trajectory of vital signs, measured over time? Can we tell, from the current data and a chosen model structure, what interventions may be needed, and what is the most likely outcome for a patient? These questions, and the strategies to answer them, will evolve and will be refined through constant interaction with clinicians, who will provide expert knowledge.

Clinicians are specifically interested in guidance on clinical management decisions such as: How long should a particular patient should be intubated for? Should a patient be given a certain drug now or should the dose be delayed? And how long might a patient remain in intensive care? In offering guidance from a mathematical model, the clinical feedback should be viewed in light of what the available data can reveal about the physiological mechanisms within the patient. That means developing statistical and machine learning algorithms that can reveal patterns in the large amount of patient data, as well as developing biomechanical models that can simulate the

underlying physiological processes inside the patient's body. That is why CHIMERA is divided in three work packages, which are described in more detail below

Mathematical Modelling Work Package

There have been mathematical models of physiological processes for well over a century, and the demand for the development of more sophisticated models has grown enormously in the past couple of decades. Modern theoretical models span vast length scales, looking at individual cells, cell membranes and their interactions, through to tissue mechanics, angiogenesis, tumour modelling and wound healing, before then moving up to full-scale models of organs such as the heart, liver and kidneys. This can be scaled up further to the idea of a virtual physiological human and, eventually, go beyond a single individual to look at social interactions and modelling the spread of disease. Biomechanical models are developed to gain a greater understanding of physiological processes and also to enable the prediction of outcomes. They also enable scientists to reduce animal testing by replacing some of those tests with computational simulations. The ultimate goal of such models is to enable clinicians to make more informed decisions and improve quality of life via better detection and management of disease.

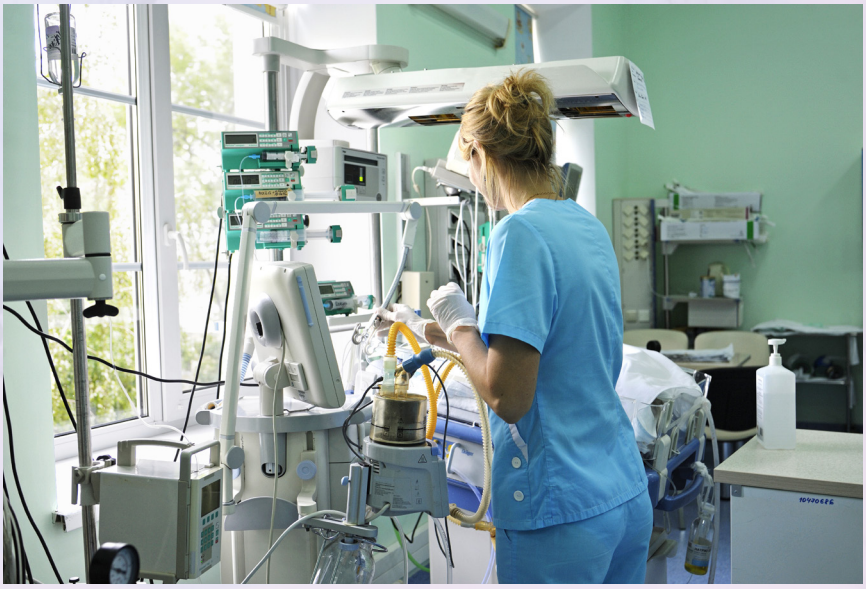

CHIMERA will work with massive data sets from the paediatric Intensive Care Unit at Great Ormond Street Hospital

CHIMERA focuses on the organ scale models and also models of systems, such as the cardiovascular and respiratory systems. Many of these models have been traditionally based on electric circuit analogies, such as the classic Windkessel models developed at the end of the 19th century. For instance, the simplest Windkessel models incorporates the idea of blood pressure as a voltage and blood flow as a current. The small capillaries and peripheral blood vessels provide a resistance to this flow, Rp, whereas the walls of the large major arteries expand as the blood pressure increases and thus are able to store more blood over part of the cardiac cycle. When these vessels subsequently contract, that blood is then pushed through the peripheral vessels and, hence, the large arteries act as a capacitor with capacitance C. A further resistance for the aorta and aortic valve can also be included, Ra, and the resulting 3-element system can be written as a simple ordinary differential equation relating the blood pressure and blood flow, where the resistances and the capacitance are parameters to be estimated from the data.

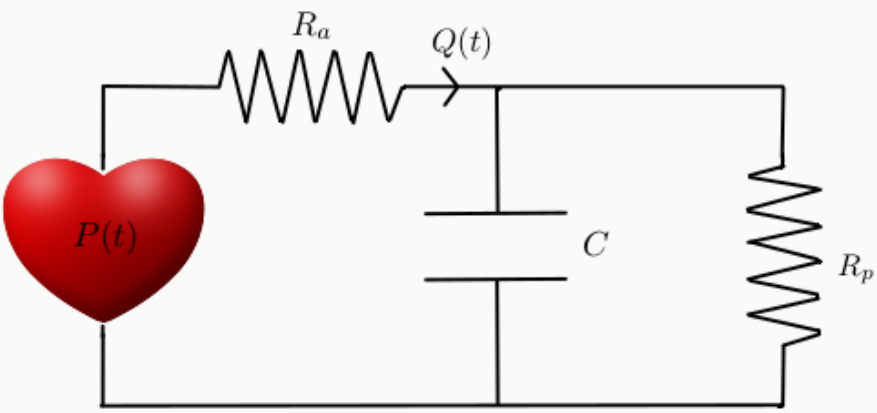

$$\left(1+\frac{R_a}{R_p}\right)Q(t)+CR_a\frac{\mathrm{d}Q}{\mathrm{d}t}=\frac{P(t)}{R_p}+C\frac{\mathrm{d}P}{\mathrm{d}t}$$

Equation relating to R and C

More sophisticated Windkessel versions can be utilised and their parameters fitted to patient data in an attempt to explain the typical waveforms of the blood pressure and blood flow observed over a cardiac cycle. From these basic principles, it is possible to add more and more components to a circulatory system, thus adding more complexity. A pioneer in this area of systems biology was Arthur Guyton, who created a physiological model that incorporates the heart, autonomic nervous system, endocrine systems, and even thirst and drinking, as can be seen in the upper right hand corner of Figure 1. In a sense, the mathematical model adopted to simulate a critically-ill patient, can be as simple or as complicated as the modeller wishes.

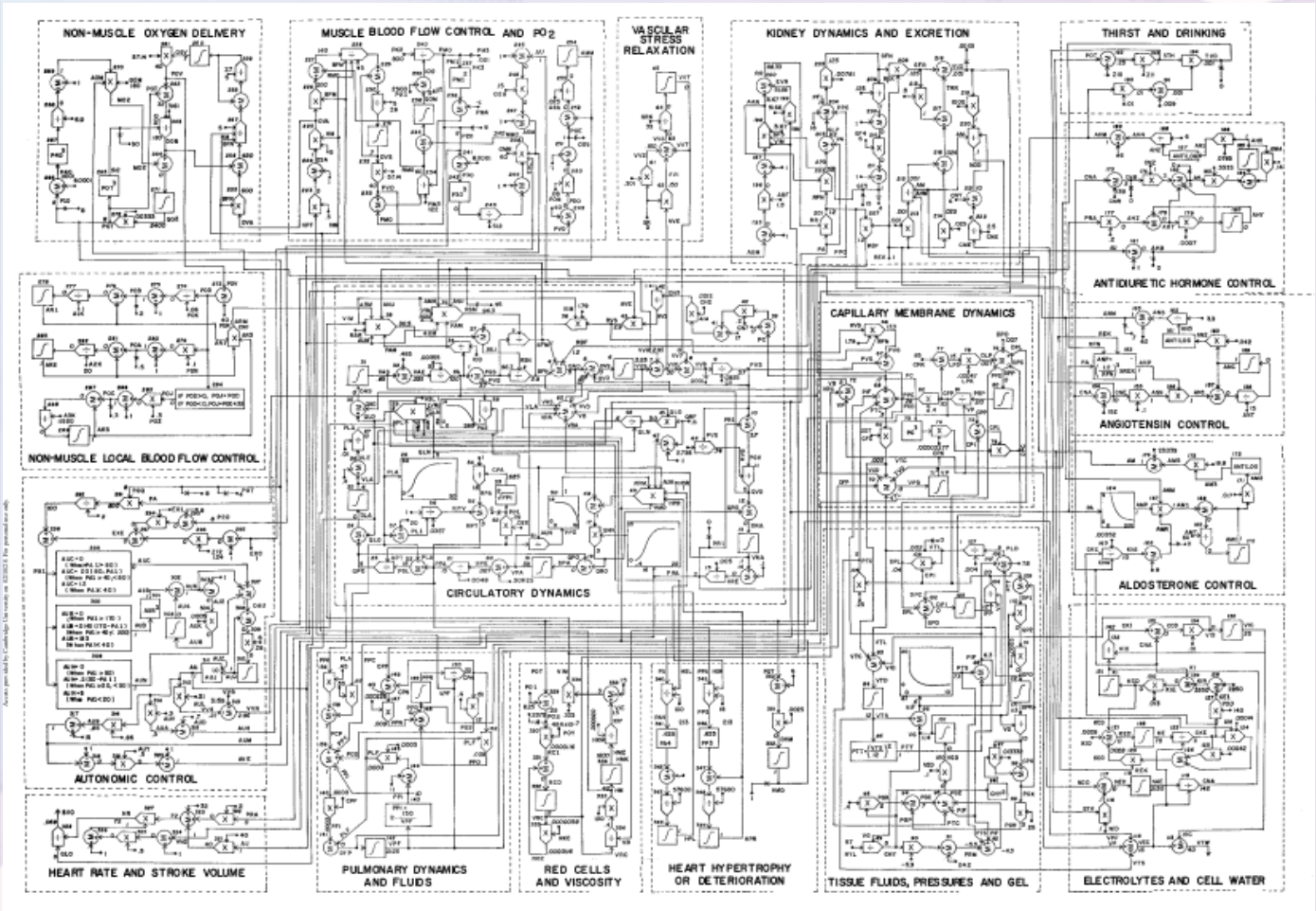

Figure 1: Circulation model by Guyton, Coleman and Granger (1972). Ann. Rev. Physiol 34: 13-46

Statistical Work Package

Due to signal loss, artefact defects and temporary suspension of treatment, the available clinical data sets exhibit large volumes of missing data. This provides an opportunity, since the absence of data is often not random and can reveal critical information about a patient's treatment. The type of inference that will be developed in CHIMERA will be used to discover information hidden in the missing data, by combining clinical expert knowledge and information from the measurements. This strand of work will also analyse the data in order to inform the biomechanical models, by providing evidence that will result in a rigorous estimation of the model parameters, as well as a measure of confidence in the results of such estimation. It is expected that the analysis of the data will uncover correlations between measurements and the state of the patients, as well as discovering structural differences due to, for example, different treatments or patient type. These correlations will be benchmarked by the research done in the machine learning work package.

Machine Learning Work Package

The parameters of the developed biophysical models will also be fitted using artificial neural networks, in a way that complements and strengthens the research in the statistical work package. Additionally, the challenge of producing computationally tractable solutions for models of electro-mechanical cardiac dynamics will be met by training neural network models with competitive accuracy to the more expensive finite element models. This approach will be extended to include other individual organ components, for instance the cerebral-vascular or renal systems, starting with an abstract compartment model so that the learned system emulates a set of coupled ODEs.

Some of the Challenges

Realistic, sophisticated mathematical models usually require greater computational effort and longer run times than is clinically practical. Furthermore, such models need a large number of unknown parameters to be determined, and many of these parameters are either very difficult or indeed impossible to measure directly. The problem is compounded when there is large variability in the parameter values between patients, and when the available data is not sufficient to support reliable calibration. Moreover, the theory behind many models might not be testable, since it is difficult, unethical or simply impractical to undertake experiments on patients. In such complex scenarios, we need to carefully ascertain to what extent a mathematical model can provide guidance rapidly enough to inform a particular clinical decision.

The focus of CHIMERA's research is to recognise that not all complex interactions across all scales are necessarily needed in the model, and our task is to carefully determine what components of the model are most significant to incorporate and what level of complexity is adequate to support clinical decision making. By combining analysis of biomechanical models, novel statistical approaches and advanced machine learning techniques, CHIMERA aims at learning the relationships that are most relevant. It is hoped that this will lead to better

understanding of the physiology and provide predictive tools for crucial decisions regarding clinical interventions. In particular, some of the data being collected is from COVID-19 patients in intensive care and it is hoped that our approach will provide greater insight into what happens physiologically to these patients, leading to a much better understanding of the progression and treatment of this disease.

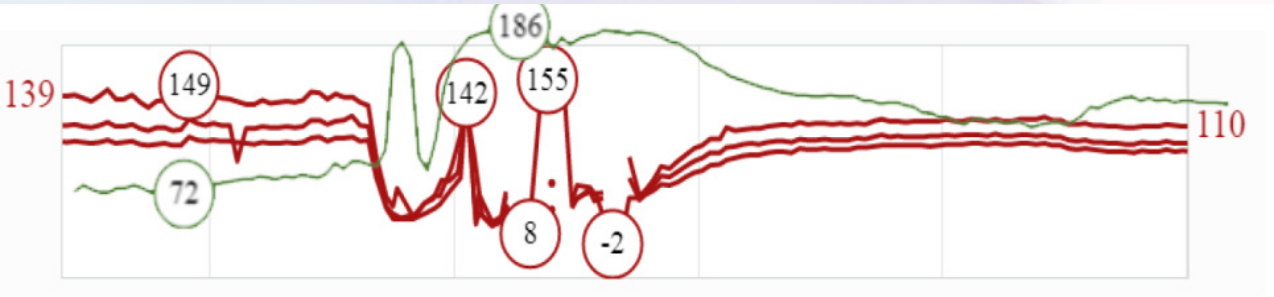

Example individual patient data streams: heart rate, blood pressure (systolic, diastolic, mean), recorded every 5 seconds for duration of patient stay.

To find out more about CHIMERA, please visit https://www.ucl.ac.uk/chimera/

Grant Successes at CORU

Dr Sonya Crowe and Professor Martin Utley

This autumn saw a flurry of grant successes for the department's Clinical Operational Research Unit (CORU), with four new awards.

CORU's Dr Sonya Crowe and Professor Martin Utley have been awarded an InnovateUK grant as part of a team led by the data science company Satalia (a UCL spinout) and Care City, a health and care innovation centre in North East London. This work will look at whether Operational Research methods can be applied to the organisation of home-based care by supporting decisions on which NHS staff visit which patients and when. Specifically, they will be looking at how optimisation methods can be used to reduce the number of different individual staff members that patients are visited by as part of improving patient and staff safety in the context of the COVID-19 pandemic.

Dr Crowe and Dr Luca Grieco have secured funds from The Health Foundation to extend an existing project so that they can tackle other important problems related to the pandemic. So far, this has resulted in them building a simulation model to help clinicians at the intensive care unit at the Royal Free Hospital. The simulation will help clinicians forecast the number of beds likely to become available in the short-term for use by patients requiring intensive care after surgery. This information will be key to the resumption of important surgical work as the second wave subsides.

Dr Crowe and Professor Utley have also started a project with University College London Hospitals. Funded by NHSX and the National Institute for Health Research, they will work with a team of clinicians, data scientists from the UCL Institute of Health Informatics and software engineers led by intensive care doctor Steve Harris to provide frontline NHS staff with better information on demand for beds and other resources. The research will link machine learning models trained on patient-level data with mathematical models of patient flow to give managers confidence that planned activity can go ahead, or an early warning of bed shortages.

Professor Utley is also part of a team being funded by The Health Foundation to improve pharmacy procurement processes using analytics. The project is led by pharmacist Hazel Kirkland at Nottinghamshire Healthcare NHS Trust, and has grown out of the dissertation she completed as part of her MSc in Health Informatics at UCL. The project team will develop an opensource tool that uses forecasting approaches to maintain safe levels of pharmacy stocks and save staff time.

EPSRC New Horizons call

Professor Sarah Zerbes

Professor Sarah Zerbes was awarded an EPSRC New Horizon Grant jointly with her husband and frequent collaborator David Loeffler (University of Warwick). The aim of the research funded by the grant is a proof of new cases of the Birch—Swinnerton-Dyer conjecture. This conjecture is one of the most famous open problems in mathematics, relating the solutions of certain types of equations (so-called elliptic curves) to the behaviour of an auxiliary function called an L-function. This problem, which is one of the Clay Milennium Prize problems, has immense ramifications throughout pure mathematics, as well as important consequences for real-world phenomena such as encryption algorithms which depend on the arithmetic of elliptic curves.

Dr Lorenzo Foscolo

This project aims to study a new class of geometric spaces, QALF hyperkähler manifolds, of great interest in geometry and theoretical physics. Hyperkähler manifolds are geometric spaces that carry an extremely rich geometric structure, which makes them particularly beautiful and constrained examples of larger classes of geometric spaces. For example, hyperkähler manifolds are examples of Ricci-flat spaces, the geometric analogues of solutions to Einstein's equations of General Relativity in the vacuum. From a completely different perspective, hyperkähler manifolds arise naturally as the spaces of vacua, or "equilibrium states", of many gauge theories in theoretical physics, that is, physical theories that generalize Maxwell's equations of electro-magnetism. In a fruitful interaction between mathematics and physics, the geometric properties of the hyperkähler manifolds can be used to derive properties of the corresponding physical theory, while physics predicts the existence of hyperkähler manifolds with distinguished properties in the first place. The main goal of the project is to construct and classify a class of hyperkähler spaces with distinguished asymptotic geometry and to describe its applications in geometry, representation theory and theoretical physics.

UCL-PKU strategic funding scheme

Dr Hao Ni

Random streamed data are ubiquitous nowadays; examples range from electronic health records (EHR) to high-frequency financial trading data. The synthetic data generation for streamed data is getting increased attention, because it is a useful toolset (i) to create an alternative dataset for preserving the data utility while protecting data privacy; (ii) to augment small datasets, which may boost the performance of data-greedy machine learning methods. A key step to developing the powerful generative models for time series is to design effective representations for distributions of complex and multi-modal data streams.

Motivated by this, our project focuses on the expected signature, a useful and essential object of Rough Path Theory (RPT), as an efficient representation to characterise random streamed data. We aim to develop a set of mathematical and computational tools based around the expected signature for synthetic data generative models for time series and validate the proposed methodology on the electronic health data (EHR). If successful, we will be able to generate high-fidelity synthetic physiological time series to solve the bottleneck of small size and missing data of EHR for machine learning research in the health domain. We are glad that our project is chosen by the UCL-PKU strategic funding scheme. The funding will support two research assistants and organisation of international workshops. This project will deepen the collaboration between the mathematics departments of University College London and Peking University.

EPSRC Fellowship

High energy spectral and scattering phenomena via microlocal analysis

Dr Jeff Galkowski

I was recently awarded an EPSRC Early Career Fellowship for a project entitled 'High energy spectral and scattering phenomena via microlocal analysis'. This project is based on set of microlocal tools I've developed called geodesic beams. They can be used to understand the behaviour of high frequency solutions of certain partial differential equations. For example, to describe the high frequency vibrations of membranes. Roughly speaking, the method decomposes a function into pieces called geodesic beams which are well localized in both position and frequency. These pieces can then be readily analysed to produce estimates on various measures of concentration of solutions of partial differential equations. The project aims to develop geodesic beam methods further and to bring them together with some exciting recent progress from harmonic analysis. The end goal is to attack some long standing questions in the theory of spectral asymptotics for Laplacians including to improve remainders in Weyl Laws on typical manifolds. This fellowship will bring two postdocs to the UCL Mathematics Department along with many short term research visitors. I hope that these new members of our department will add to the already vibrant intellectual environment at UCL.

Chalkdust

Chalkdust has been carrying on much as it always has, with the exception of a large printing backlog and the noticeably more virtual team meetings now familiar to everyone. But as mathematicians, we settled into our new much less social way of life as if it were second nature (let's be honest - first nature), and since last year two new issues, 11 and 12, have been released, which you can read at chalkdustmagazine.com.

Chalkdust, if you don't know, is a magazine for the mathematically curious, edited (mostly) by past and present UCL PhD students and undergraduates. Some articles are written by members of the team but most are submitted via email from other maths enthusiasts. We also write a lot of regulars such as "Dear Dirichlet" (our agony aunt) and "Hot or Not" (so you can keep up with the maths trends of the day). We also conduct an interview for each issue. This year, we spoke with Trachette Jackson (a professor of mathematical oncology at the University of Michigan) about how mathematical modelling can help cancer treatment, and in Issue 12 we spoke with Christina Pagel about the unending applications of operational research (not just the pandemic).

Of course, we have had to find creative alternatives to our traditional launch parties (a "party" is a type of gathering popular in the pre-Covid era), starting with our first Chalkdust puzzle hunt to celebrate the launch of Issue 11 in April 2020. We released puzzles periodically throughout the day, and solving them all entitled you to some secret online Chalkdust content (you will have to solve them yourself to know what). Matthew Scroggs (an ex-PhD student and member of the Chalkdust team) announced the launch of Issue 12 live in the middle of the night during a 24 hour maths magic livestream in November 2020, as well as showing off his very impressive matchbox computer (yes, literally a computer made out of matchboxes) which he was able to teach to play Nim using machine learning.

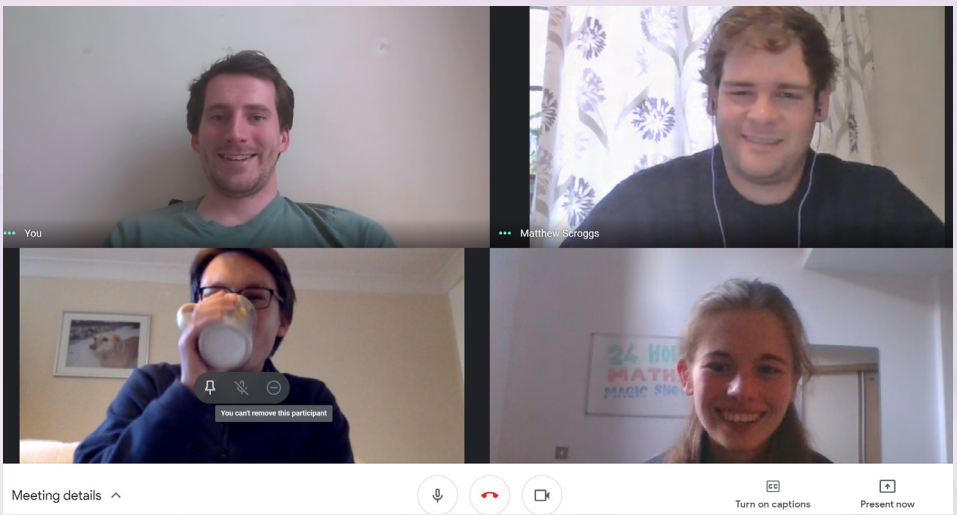

Planning our livestream! Clockwise from top left: David Sheard, Matthew Scroggs, Sophie Maclean, Adam Townsend.

Another event on Chalkdust's virtual social calendar this year was the Chalkdust quiz we organized to welcome our new PhD students to UCL, with questions by Jakob Stein, including a round based on Google analytics search queries (which had more searches –"writing my thesis" or "vegetable picking jobs near me"?*) and a British round to provide essential education for new international students, such as which condiments are acceptable to consume with chips. The was also a round for the new students to create their own questions – "When is a door not a door?"**

We're looking forward to doing it all over again next year, and eventually releasing printed copies of our new Chalkdust issues!

*Don't panic, it is "writing my thesis"

** When it's ajar

For the newest issue on CHALKDUST please visit: https://chalkdustmagazine.com

Prizes Awarded to Students Summer 2020

Second Year Prizes

Bosanquet Prize
Seth Hardy

Kestelman Prize
David Villringer

Andrew Rosen Prize
Anna Kitchin

Departmental Prize in Mathematics
Christopher Dunkin

Third Year MSci Prizes

The Nazir Ahmad Prize
Zhefan Zhou

Third Year BSc Prizes

Wynne Roberts Prize
Enea Sharxhi

Mathematika Prize
Axel Kerbec

Final Year Prizes (BSc or Msci)

Andrew Rosen Prize
Andela Markovic

The Institute of Mathematics and its Applications (IMA) Prizes

One year membership of the IMA
Myles Workman
Enea Sharxhi

Fourth Year Prizes

Ellen Watson Memorial Scholarship
Renjie Cui

David G Larman Prize
Myles Workman

Susan N Brown Prize
Ulf Persson

Fourth Year Project Prize
Vivienne Leech

Fourth Year Sessional Prize
Cameron Kemp

Joint Honours Prizes

Bartlett Prize (Joint Mathematics & Statistical Science)
Elijah Wong

Castillejo Prize (Joint Mathematics & Physics)
Yan Chung

Joining Student Prize

Panos Tofarides Prize
Andrea Argyrou

PhD Scholarships 2020 - 21

Wren Fund Scholarship
Baoren Xiao

Monica Hulse Scholarship
Amalia Gjerloev

Edwin Power Scholarship
Alexander Tetlow

J J Sylvester Scholarship
Thuy Duong Dang

Archibald Richardson Scholarship
Federico Barbacovi
Holly Green

Lighthill Fund Scholarship
Ellen Jolley

Corte Studentship
Alex Zhao

Sir George Jessel Studentship

Mayer de Rothschild Scholarship
Holly Green

David Warren Fund Scholarship
Vivienne Leech

PhD Prizes 2020 - 21

Andrew Rosen Prize (Applied)
Erik Jensko

Davenport Prize (Pure)
Bishal Deb

Students who have recently obtained PhDs from the Department include:

Sam Porritt *(supervised by Andrew Granville)* ‘’ Polynomials over a finite field: some analytic number theoretic results"

Rudy Kohulak *(supervised by Frank Smith)* ‘’Heat-transfer modelling in freeze-drying and related processes’’

Grace Zihua Liu *(supervised by Ted Johnson)* "The generation and evolution of internal solitary waves"

Michele Giacomini *(supervised by Andrei Yafaev)* ''Flows on mixed Shimura varieties’’

Niki Kalaydzhieva *(supervised by Andrew Granville)* "Multiple solutions of Pell's equation and continued fractions over function fields"

Stephanie Chan *(supervised by Andrew Granville)* "On the 2-parts of class groups and Diophantine equations"

Ardavan Afshar *(supervised by Andrew Granville)* "Topics in the arithmetic of polynomials over finite fields"

Udhav Fowdar *(supervised by Jason Lotay)* "Circle and torus actions in Exceptional Holonomy"

Alex Stokes *(supervised by Rod Halburd)* "Studies on the geometry of Painleve equations’’

Sean Jamshidi *(supervised by Ted Johnson)* "The vorticity dynamics of coastal currents and outflows"

Giada Grossi *(supervised by Sarah Zerbes)* "Euler systems and their applications"

Gregorio Baldi *(supervised by Andrei Yafaev)* "Shimura varieties, Galois representations and motives"

Mihai Simion Nechita (*supervised by Lauri Oksanen)* " Unique continuation problems and stabilised finite element methods''

Eleanor Doman *(supervised by Nick Ovenden)* "Modelling the mechanical properties of peripheral nerves and experimental tissue-engineered conduit designs"

Congratulations to all!

Awards

The GreenUCL

The department achieved a Gold Award for Green Impact from GreenUCL. Many thanks to the Green Team.

International Mathematics Competition for University Students

UCL had an excellent showing in this year's International Mathematics Competition for University Students:
- Dijia Chen got a First Prize with 32 points
- Mathieu Wofgang Wydra got a Third Prize with 18 points
- Renjie Cui got Honourable Mention with 14 points.

Faculty Education Awards

The department has three winners of Faculty Education Awards:
- Nadia Sidorova, Teaching Awards
- Ibrahim Bulime, Support Staff Awards
- David Sheard, PGTA Awards

BEAMS Professional Service Awards

Financing our ambitions
Soheni Francis

Student Choice Awards

The following staff were nomriated for the Student Choice Awards:

Inspiring Teaching Delivery
Dr Luciano Rila
Dr Isidoros Strouthos
Professor Rod Halburd

Excellent Personal Tutoring
Dr Mark Roberts
Dr Isidoros Strouthos

Other Awards

Dr Andrew Graham has been awarded the Cecil King Travelling Scholarship by the LMS.

Dr Hugo Castillo Sanchez has been awarded the British Society of Rheology's annual thesis prize, the Vernon Harrison Award.

Dr Chris Evans was awarded an LMS Early Career Fellowship.

Dr Sonya Crowe and Professor Martin Utley won an NHSX / NIHR grant led by Steve Harris (an ICU clinician at UCLH) on developing a real-time bed demand forecasting model.

Dr Matteo Capoferri has been awarded a MAPS Faculty Postgraduate Research Prize Commendation 2020 for his PhD thesis work.

Dr Hao Ni, her student Hang Lou and the rest of her DataSig team has been selected as one of the analytic teams in the De-Covid project at the Alan Turing Institute.

Promotions

Associate Professor Alejandro Diaz De La O

I joined CORU and the Department of Mathematics in September 2019. Before that, I was at the Institute for Risk and Uncertainty, University of Liverpool. During those years, I developed strong industrial partnerships. I led a team of 6 PhD students, all with industrial involvement. Some projects included: estimating the probability of failure of a filter for a biodiesel engine and developing stochastic optimisation techniques for robust design. I also did consultancy on surrogate modelling for engineering companies such as Airbus and Zenotech. I was in the steering committee of a Knowledge Transfer Network (KTN) Special Interest Group, called Uncertainty Quantification & Management in High Value Manufacturing. In 2016, this led to the organisation of a study group with industry, where challenge problems were supplied by companies such as Airbus and Jaguar Land Rover. The following year, I organised a second study group, attracting new industrial challenges by Rolls Royce and the Manufacturing Technology Centre. In those study groups, about fifty academics from across the UK worked for three days proposing mathematical and computational solutions and identifying best practice. During my career, I have had the opportunity to work in environments which have increased my contact with other mathematicians. Examples of these are the EPSRC Mathematical Sciences Early Career Forum and the Expert Panel for the network Models to Decisions (M2D), funded by UKRI. More recently, I have become Associate Editor of the SIAM Journal on Uncertainty Quantification. In 2018, I became an EPSRC Innovation Fellow, which allowed me to be a visiting researcher at the Alan Turing Institute in 2019. Within CORU, apart from continuing working on my fellowship, I am leading a work package within CHIMERA: Collaborative Healthcare Innovation through Mathematics, EngineeRing and AI. CHIMERA is a multidisciplinary Hub which brings together experts in the departments of Mathematics, Mechanical Engineering and Computer Science. We have access to high-volume, rich vital signs data sets from both adult and paediatric Intensive Care Units in Great Ormond Street Hospital and University College London Hospital. The role of the team I'm leading (one postdoctoral researcher and one PhD student) is to uncover patterns in the data sets that will enable statistical inference. This will provide information to calibrate bio-mechanical ODE models that our colleagues will design, as well as bench-marking other methods such as artificial neural networks. This work will also provide plenty of opportunities for the development of new methods and algorithms.

Professor Nicholas Ovenden

Nick is interested in using applied mathematics to solve real problems in healthcare and industry via interdisciplinary research. His research typically involves tackling challenging aspects of fluid and solid mechanics that utilise asymptotic and perturbation methods. Recent research projects include controlling the mechanical properties and vascularisation of engineered nerve tissue, and modelling the transmission of ultrasound through clouds of microbubble contrast agents. He now co-leads the biomechanical modelling group in the EPSRC-funded CHIMERA Mathematical Sciences in Healthcare Hub, which uses mathematical models and statistical approaches to guide clinical decision making for critically-ill patients.

Aside from his research and departmental roles, Nick is also currently the Vice-Dean of Development, a role in the Faculty of Mathematical and Physics Sciences that focusses on external and alumni engagement.

Professor Steve Baigent

Steve Baigent obtained his PhD from Oxford University and joined UCL in 1994. He is interested in applications of dynamical systems theory to biology. His particular research interests are in monotone dynamical systems and global stability. Recently his research has focused on the geometry of invariant manifolds and attractor boundaries, and how that geometry relates to the stability of equilibria. These methods have been successfully applied to help gain a better understanding of various well-known models from ecology and population genetics.

New Staff

Dr Ruth Reynolds - Lecturer - STACK

Ruth grew up on a small farm in mid-Wales. After finishing school, she went on to study mathematics at the University of Manchester. Following this, she moved to Edinburgh for her PhD in noncommutative algebra under the supervision of Dr Susan Sierra during which she developed her love of teaching. Her interests outside of mathematical research lie in computer-aided assessment of mathematics and effective methods of teaching. Since completing her PhD this past summer, Ruth has been working as a teaching fellow for the University of Edinburgh. When not thinking about maths or teaching, Ruth can often be found baking bread, going on long hill walks, or playing the violin (but not all simultaneously!).

Dr Ben Davies - Lecturer - STACK

I am an education researcher focussed on the STACK-based assessment project for undergraduate courses across the department. I will be working closely with Dr Ruth Reynolds, our team of (under-) graduate students and the relevant instructors to develop pedagogically-robust automated assessments for all first- and second-year modules. I was born and raised in New Zealand where I completed my undergraduate studies in Mathematics. My PhD, completed at Loughborough University, focussed on novel approaches to the assessment of tertiary mathematics considering methodological, pedagogic and epistemic aspects of assessment related to proof comprehension. My other research interests include implementation and consequences of automated assessment, epistemic injustice in mathematical practice, and quantitative methods in social science. Before joining UCL, I was a postdoc at West Virginia, furthering this research agenda while teaching modules in calculus, proofs and problem solving and research methods.

Dr Beatriz Navarro Lameda - Teaching Fellow / Tutorial Teacher in Pure Mathematics

I recently graduated from the University of Toronto with a PhD thesis in probability and stochastic PDEs. During my postgraduate work, I developed a deep passion for teaching and I have now transitioned to mathematics education. I am extremely fond of IBL (Inquiry Based Learning) and flipped classroom teaching models, mastery-based assessment methods, and teaching mathematical writing. Altogether, I am a big proponent of teaching innovation in and outside the classroom.

Dr Jonathan Marshall - Teaching Fellow / Tutorial Teacher in Pure and Applied Mathematics

My research background is in applied complex analysis, with applications mainly to fluid mechanics and in particular, vortex dynamics and free boundary problems.

Dr Michal Kwasigroch - Teaching Fellow - Applied Mathematics

I am a theoretical physicist interested in the mathematical formulation of exotic states of matter. These can often be characterised by a combination of topological defects, such as vortices, and continuous symmetries, such as those described by the SU(n) group. I am particularly enticed by cases, where the collective behaviour is most elegantly formulated in terms of objects that cannot be built from the actual microscopic constituents, e.g. a system of dipoles formulated in terms of monopoles.

I was born and raised in Warsaw before coming to the UK at the age of 13. I completed both my undergraduate studies in Natural Sciences and PhD in Theoretical Physics at the University of Cambridge. After two postdocs and several part-time teaching appointments, at the London Centre of Nanotechnology and Cambridge, I am joining the Maths Department as associate lecturer (teaching) where I look forward to taking part in teaching as well as research.

Dr Betti Hartmann - Teaching Fellow - Applied Mathematics

Betti did her PhD in Theoretical physics as well as her habilitation (a post-doctoral qualification as a university lecturer at German universities) at the University of Oldenburg in Germany. She has done Post-Docs at the University of Durham, UK and the University of Tours, France. She is interested in non-linear phenomena in flat and curved space-time - in particular she studies black holes and (topological and non-topological) solitons with applications to astrophysics, cosmology, condensed matter and biophysics.
In recent times, she has been active in studying applications of the AdS/CFT correspondence, solitons and black holes in Anti-de Sitter space-time as well as predictions of Grand Unified models and Superstring Theories for the primordial universe.

Dr Yusra Naqvi - Teaching Fellow - Pure Mathematics

I am a pure mathematician interested in algebraic combinatorics, representation theory and geometric group theory. In particular, I study algebraic groups via their actions on symmetric polynomials and on simplicial complexes. Before starting at UCL, I worked at the University of Sydney (Australia) and before that at Amherst College (USA).

Dr David Solomon - Teaching Fellow / Tutorial Teacher in Pure Mathematics

Dr Niki Kalaydzhieva - Teaching Fellow / Tutorial Teacher in Pure Mathematics

Beryl Lankester
12 April 1946 to 12 July 2020

Our former colleague, Beryl Lankester, sadly died on 12 July 2020. Beryl started working in the General Office of the department on 25 May 1979 and was a member of the support staff team until her retirement on 12 May 2006.

Beryl's role varied as Executive Officer, Secretary, Administrator and she was clearly pivotal in keeping the department running for many years. Beryl had a great skill in typing complex mathematical papers including the department's examinations papers and all of the research papers and outputs for Sir James Lighthill and Professor Frank Smith. She was also involved in many other areas such as Royal Society editorial work, research grants and reports and later the new MSc in Mathematical Modelling. She achieved all of this whilst surviving a brain tumour in her younger days. Beryl spoke openly about this experience.

Beryl was a lovely colleague and friend; I remember very much her kindness to me when I started in the department many years ago. We continued to meet up after her retirement for a few outings to the ballet each year. Beryl introduced me to the ballet, in particular, the work of her favourite dancer, Carlos Acosta, and we had a fun trip to Nottingham for Beryl's 70th to see Carlos. On a personal note, I will miss her.

As well as the ballet, Beryl had many interests including sailing, travelling, being an active member of her local Green Party, and a keen advocate of what were called 'green issues' – she was one of those people who knew the world should listen back then.

Beryl was married to Roger who sadly died in August 2021. We send our condolences to Beryl's son, Matthew, and family.

Helen Higgins
Departmental Manager

Anthony Michael John Davis died in San Diego, California, on 25 April 2021.

Tony was active in the research community. This photo comes from the ACCA, Applied and Computational Complex Analysis

Tony was born in London in December 1939. He received an Open Exhibition in Mathematics and went up to St. John's College, Cambridge in 1956. He received a BA in 1960 and was a Wrangler, with a distinction in Part III of the Tripos. He carried out his PhD research under the supervision of Fritz Ursell, FRS, subsequently receiving a DSc in 1977 from the University of London for contributions to the theory of surface waves.

After spending time as Head Mathematician at the Mining Research Establishment of the National Coal Board in 1963–1965, he was Lecturer and then Reader in Mathematics at University College London from 1965–1984. During this time, he visited a number of universities worldwide and was a Fulbright Scholar in 1972–1973 at the University of Denver.

He married Roberta (Bobbie), née Mallett, in 1965, and they had two children, Nigel (b.1967) and Sandra (b.1971).

After leaving UCL, Tony was a Visiting Professor of Mathematics and Oceanography at the University of Hawaii in Spring 1985. He was then Professor of Mathematics at the University of Alabama from 1985 to 2006.

After spending an enjoyable sabbatical in 2005 visiting the University of California, San Diego (UCSD), he and Bobbie moved to Carlsbad in North San Diego County in 2006, where they were closer to their daughter, Sandra, and where they had made friends during his sabbatical. Tony kept a visitor status in the Department of Mechanical and Aerospace Engineering at UCSD. He remained active until COVID-19, and would come in several days a week. He enjoyed having lunch outdoors with colleagues and attending seminars.

He continued to collaborate with engineers and mathematicians worldwide, and would attend the APS Division of Fluid Dynamics (of which he was a life member) every year, making sure to meet friends for dinner. He also attended other conferences and symposia, and would also visit Milne Anderson, formerly of UCL, in London regularly until Milne's death.

His research interests included low-Reynolds number hydrodynamics, scattering of electromagnetic waves, surface gravity waves on water, and acoustic diffraction. In all of these areas, he was a master of analytical techniques, and always keen to learn new approaches. As noted by long-time collaborator David Abrahams, he "held a unique collection of techniques and encyclopaedic knowledge. His passing marks the end of such people I think." He was a conscientious and rigorous reviewer for journals.

He followed cricket, rugby (he had played for Wasps Seconds) and English football (in particular Arsenal) regularly, benefiting from the Sporting Life's website. He enjoyed going to Padres baseball games; his accounts of the games sometimes discussed the length of the game more than the score. He could always be counted on to bring good beer to parties and enjoyed social events.

He is survived by his wife Bobbie, his son Nigel and daughter-in-law Dawn of Annapolis, his daughter Sandra of Los Angeles, and grandchildren.

Tony will be much missed by family, friends and colleagues for his kindness, vast knowledge of applied mathematics, and willingness to pursue new and interesting problems.

Stefan Llewellyn Smith (Department of Mechanical and Aerospace Engineering, UCSD)

Frank Johnson believes that Tony may in fact have played for Wasps First XV in his youth. He was still turning out for Wasps Third XV up to the time he left UCL in 1984, as could be spotted from the various scrapes he would appear with on a Monday morning.

Many past colleagues have been in touch and the almost universal remark has been about Tony's friendliness and kindness to new staff members.

Alumni Careers Advice

The Department is keen to welcome alumni to its careers events and fairs for our current students. This includes alumni who have gone on to complete further study.

If you are interested in this possibility, please contact Professor Helen Wilson at helen.wilson@ucl.ac.uk

We also encourage you to join the UCL Alumni Online Community (ucl.ac.uk/alumni) to stay up to date with the latest news, views, events, special offers and exclusive opportunities from UCL, and stay connected with your fellow alumni.

Contributing to the De Morgan Association Newsletter

We would welcome news and contributions for the next newsletter, to be sent to:

Professor Ted Johnson, The De Morgan Association, Department of Mathematics, University College London, Gower Street, London WC1E 6BT

Email: editor_newsletter@math.ucl.ac.uk